REF. NO. **11-0986**

PROPOSED SPECIFICATIONS FOR APPROVAL

CUSTOMER FANDIS

PART NAME AC FAN MOTOR

MODEL 4710PS-23T-B30-AS1

DATE 2011/12/26

COVER	1	Page
SPECIFICATIONS	1	Page
TOTAL	2	Pages

SIGNATURE

PLEASE RETURN 1 COPY OF THIS PROPOSED DRAWING WITH YOUR SIGNATURE.

For your use in safety

Carefully read the precautions before use and use the motor properly and safely.
In "For your use in safety", the rank of safety precautions are being divided into "warning" and "cautions".
warning : Due to mishandling, a dangerous condition might occur and there is a possibility of death or serious injury.
Precautions : Due to mishandling, a dangerous condition might occur and ther is possibility of medium human disorder or material disorder. There might be cases where there are heavy damages.

Warning

- Do not use in an explosive atmosphere, flammable atmosphere and locations where water falls onto. It might cause a fire, injury or electric shock.
- Installation, wiring connection, inspection,etc. Should be done by a person with professional knowledge. You might get an electric shock or be injured.
- Do not move, wire or inspect the motor when applying current. You might get an electric shock or be injured. After turning switch off, kindly proceed your operations ensuring safety.
- Do not pull out or push in the lead wire when applying current. You might get an electric shock. And do not touch the connection terminals, etc. when applying current. You will get an electric shock.

Precautions

- Whenever the motor is used in any equipment that holds large social and public effects, kindly consider the measures for equipment protection at equipment side once the motor stops rotation.
- As you may get injured, do not put your fingers into the motor while rotation.
- Static electricity causes motor and equipment failures. Take appropriate measures against static electricity during installation of motor.
- Do not hold the lead wire part. Might cause the motor to drop off.
- For your use, strictly follow rated operating voltage additionally frequency, in particular, AC motors as well as environment in use, such as temperature, humidity range.

Minebea Motor Manufacturing Corporation	APD. BY	CHC. BY	DET. BY
	Kumada	Suzuki	AMN

MARK	DATE	REASON／ECN NO.	ENG.	APP.
2	11/08/31	ECN90972/A	AMN	USD
2	11/12/26	ECN91024/B	AMN	USD

項目 (ITEMS)	諸元 (DESCRIPTION)	
モーターの種類 (MOTOR TYPE)	単相２極隈取りコイル誘導電動機 2P Single Ph. Shaded Pole Induction Motor	
定格 (Rating)		
定格時間 (Duty)	連続 (Continuous)	
電圧 (Voltage) (V)	230	
周波数 (Frequency) (Hz)	50	60
起動電圧 (Starting Voltage) (V)	175	
定格回転速度 (Speed) min (min⁻¹)	2350	2800
定格電流 (Current) max (A)	0.10	0.09
定格入力 (Input Power) $^{+10}_{-20}$% (W)	14	11
最大風量 (Max. Air Flow) ☆2☆3 (m³/min)	1.5	1.8
最大静圧 (Max. Static Pressure) ☆2☆4 (Pa)	42	46
拘束電流 (Locked Rotor Current) (A)	0.11	0.10
規格 (Standard)		
絶縁抵抗 (Insulation Resistance) ☆6	DC500Vメガーにて100MΩ以上 (min 100MΩ BY DC500V Megger)	
絶縁耐圧 (Dielectric Withstand Voltage) ☆1☆6	AC1800V, 50(60)Hz, 3s	
温度上昇 (Temperature Rise) 抵抗法 (Resistance Method)	max 70℃	
期待できる寿命 (故障率10%) (Life Expectation (L10 Life))	25℃にて100,000時間 (100,000h at 25℃) 寿命とは、定格電圧印加時の回転速度が以下の様になった状態とする。 回転速度 : 初期値 -30%以下 (The motor life is decided as follows Speed : less than -30% of initial value)	
許容環境温度範囲 (Allowable Ambient Temperature)	-40℃～+50℃ (Operating) -40℃～+70℃ (Storage) ☆7 実用上さしつかえない状態で結露無きこと (No dew formation at operating and storage condition)	
表面処理 (Surface Treatment)	黒色塗装 (Black Painting)	
質量 (Mass : kg)	0.32	
騒音 (Noise : dB) ☆2	29/34 (50/60Hz, 側面より1m) (50/60Hz, 1m aside)	
保護方式 (Protection)	インピーダンス プロテクト (Impedance Protected)	
絶縁階級 (Insulation Class)	E種 (class E)	
型式許可番号		
cULus File No.	E89936	
VDE File No.	1507300	
European Standard No.	En60-335-1	
構造 (Structure)		
軸受 (Bearings)	ボールベアリング (Ball Bearings)	
端子 (Terminal)	ファストン#110 相当品 (FASTON #110 or equiv.)	

特記事項 NOTE

(1) 本仕様書に記載されていない項目で特に決めの必要項目は事前に御連絡下さい。
SPECIFICATIONS WILL BE SPECIFIED BETWEEN MANUFACTURE AND CUSTOMER, IF CUSTOMER REQUIRED ANY OTHER SPECIFICATION FROM SPECIFICATIONS.

(2) 当仕様満足範囲において性能向上の為、部品等一部変更する場合があります。
PARTS DESIGN WILL BE CHANGED WITHOUT ANY INFORMATION DUE TO IMPROVE THE MOTOR CHARACTERISTICS BY UNDER SPECIFIED SPECIFICATIONS.

(3) 保管はできるだけ６ヵ月以内とし、高温多湿の場所は避けて下さい。
STORAGE TERMS SHOULD BE WITHIN 6 MONTHS AS MUCH AS POSSIBLE, AND SHOULD NOT BE KEPT IN HIGH TEMPERATURE AND HIGH HUMIDITY AREA.

(4) 納入品単体の故障により誘発される損害はご容赦いただきます。
THE MANUFACTURER IS NOT LIABLE FOR DEFECTS CAUSED BY IMPROPER TRANSPORTATION.

(5) 本製品は、極めて高度の信頼性を要する用途（医療装置等、多大な人的・物的損害を及ぼす恐れのある用途）に対応する仕様にはなっておりません。そのような場合には、予め弊社営業窓口までご相談ください。
ALL THESE PRODUCTS DO NOT HAVE SPECIFICATIONS THAT CAN HANDLE APPLICATIONS THAT REQUIRE EXTREMELY HIGH LEVELS OF RELIABILITY, SUCH AS MEDICAL EQUIPMENT OR OTHER APPLICATIONS WHOSE FAILURE CAN BE REASONABLY EXPECTED TO RESULT IN SERIOUS PHYSICAL AND/OR MATERIAL DAMAGE. CONSULT WITH YOUR NMB/MINEBEA REPRESENTATIVE NEAREST YOU BEFORE USING ANY NMB/MINEBEA PRODUCTS DESCRIBED OR CONTAINED HEREIN IN SUCH APPLICATIONS.

Minebea Motor Mfg. Corp. KZW '11.12.26 ISSUED FAN MOTOR

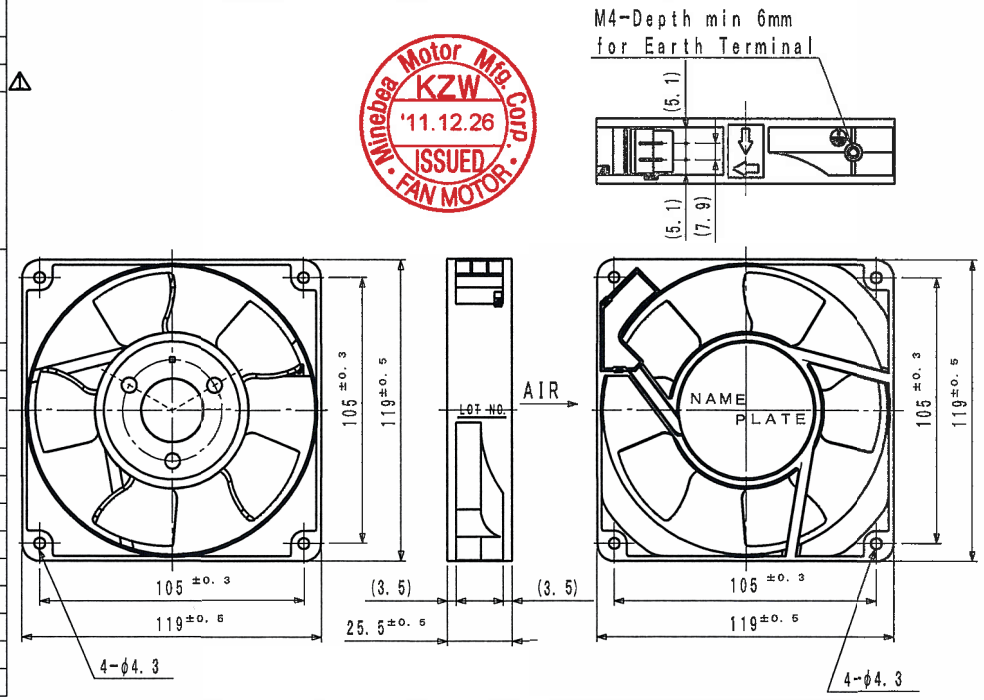

NOTE
☆1 Guarantee AC 1500V 1 min
☆2 Designates average values
☆3 At 0 static pressure
☆4 At 0 Air Flow
☆5 Producing Country "CHINA, JAPAN"
☆6 Between Frame and Terminal
☆7 To be free of defects on practical use after 100h of stored at -40℃～+70℃ and 24h to ambient humidity.

NMB-MAT Minebea Motor Manufacturing Corporation ミネベアモータ株式会社	単位 UNIT mm 尺度 SCALE ～	材質 MATERIAL 表面粗サ SURF. ROUGH.	作成日 DATE 2011/ 08/ 15 品名 DESCRIPTION AC FAN MOTOR	
APPROVED USD / CHECKED SND / DRAWN AMN	一般公差 TOL: 寸法L / 公差 L≦4 ±0.1 4<L≦16 ±0.2 16<L≦63 ±0.3 63<L≦250 ±0.5 250<L≦1000 ±0.8 角度DEG ±0.5	熱処理 HEAT TREAT 表面処理 FINISH	品番 PART NO. (MODEL NO.) 4710PS-23T-B30-AS1 図番 DRAWING NO. 4710PS-23T-B30-AS1	葉番 SHEET 1/1 改訂 REV. B